SISSR

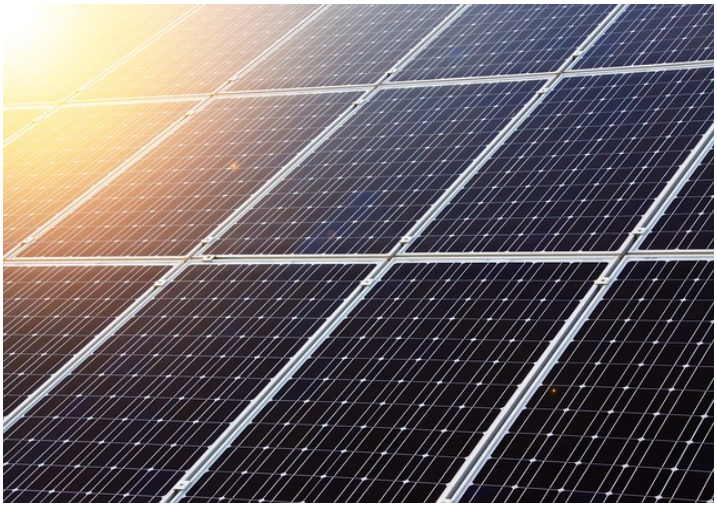

Nature’s Natural Remediation Solution

Blueforest
ENVIRONMENTAL DEVELOPMENT

Sustainable In-Situ Soil Remediation - SISSR

SISSR is a new and innovative remediation approach to effectively and sustainably treat organic contaminants. It employs several green energy technologies to enhance microbiological degradation. It avoids the high cost and risks associated with biological, chemical, and thermal remediation treatments by exploiting what is naturally present in the soil to immobilize and cleanup contaminants. This technology enhances subsurface biological activities by increasing temperatures and injecting air into the soil to enhance biostimulation. All energy is produced onsite through wind and solar power making this remediation technology a net-zero system.

Recommended for:

* Deep depth
* Any size
* Saturated zone
* Biodegradable contaminants
* Porous media
* Extended treatment time

SISSR Benefits:

- ***COST*** effective solution
- ***SAFE*** treatment environment
- ***RENEWABLE*** energy process
- ***TREATS*** variety of media
- ***NATURAL*** occurring process
- ***NO WASTE*** generated
- ***LOW EMISSION*** output
- ***PREVENTS CONTAMINATION*** rebound
- ***DEEP*** treatment depth
- ***UNRESTRICTED*** by infrastructures
- ***REUSABLE*** aboveground equipment
- ***COMPACT*** and mobile
- ***CONTROLLABLE***– monitored and manipulated remotely

Sustainable Remediation Technology

Conceived in 2010, SISSR technology collects and harnesses renewable energy and redirects it back into the remediation process. All energy consumed is produced onsite by wind and solar power. Each renewable energy source has two functions:

Wind

1. To produce compressed air which is then injected into the soil to support the biodegradation process
2. To extract soil vapors generated from the biodegradation process

Solar

1. To generate electricity to run all the small pumps and electrical components
2. To produce warm water using a solar thermal collector system which is then circulated into the soil to increase subsurface temperatures by 7 to 12° C

When soil temperatures increase from 10^{0}C to 20^{0}C, it has a positive effect on the remediation process since it enhances desorption. Not only will bacteria activity increase, but the contaminants' solubility and volatilization will also increase. This results in the mobilization of the contaminants from the soil phase to the water phase, making the contaminants more readily available for microorganisms to consume. All of these factors assist in an accelerated remediation cleanup time.

Energy storage facilities are not necessary with SISSR since the demand for energy and heat can always be directed towards the process. When compressed air is not produced due to wind deficiencies and heat is not generated due to solar restrictions, this lull in activity is not a problem. It is believed these temporary interruptions allow preferential pathways in the subsurface to be redistributed with bacteria making it easier for the bacteria to consume the contaminants once the system starts up again.

Prior to the installation of this system, wind and solar calculations will need to be completed to determine the renewable energy efficiency levels in the area.

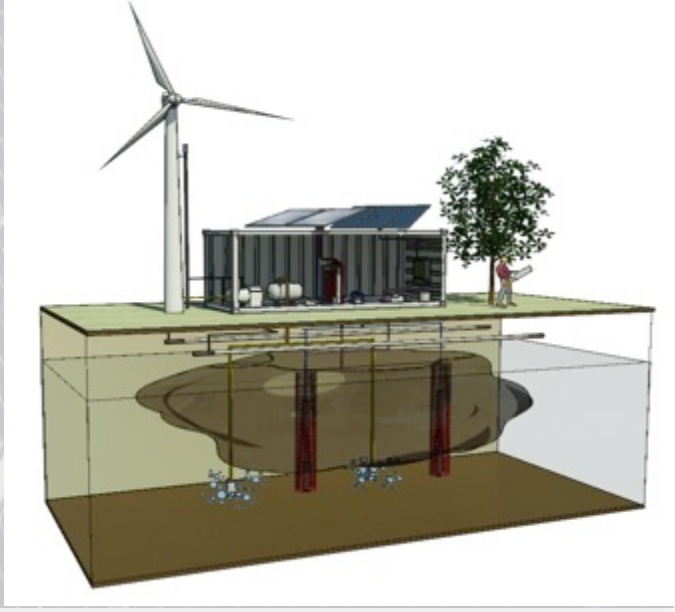

The SISSR System

Each SISSR is built based on the conditions of the site but all contain the following pieces of equipment:

1. Solar collector – to heat the water
2. Solar cell – to generate electricity for the system
3. Solar invertor – to turn sunlight into energy
4. Turbine – to produce compressed air and extract vapors from the soil
5. Vent – to extract soil vapor
6. Compressor
7. Pressure vessel for air
8. Circulation pump 2
9. Boiler
10. Circulation pump 1
11. Nutrient injection pump
12. Nutrient storage
13. Vapor extraction
14. Groundwater level
15. Contamination area
16. Air injection
17. Soil heating elements
18. Nutrient injection

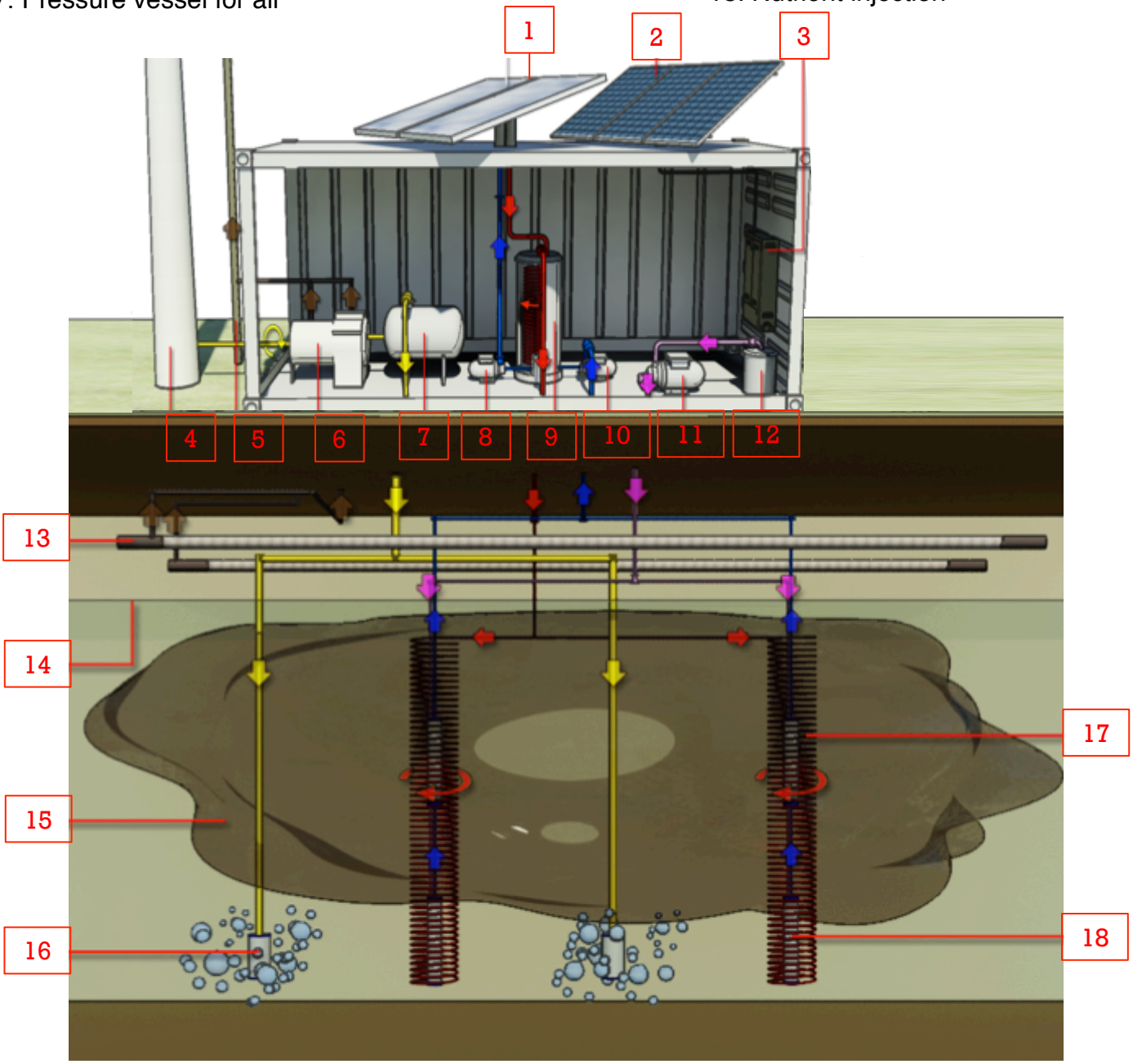

In Situ Application

Conventional soil remediation technologies are energy intensive and usually consume electricity from nonrenewable sources. This makes these treatments unsustainable and costly. SISSR is designed to reduce remediation costs while at the same time being green. Once remediation is completed the solar panels and wind turbine can either stay onsite and be incorporated into the redevelopment plans or be moved and used at another remediation site.

With this in-situ process, revolutionary heating elements were designed and built to allow nutrients within each heating well to be injected into the soil to enhance biodegradation. Since this is a biological process, remediation time is not instantaneous.

Gases produced from this process primarily consist of carbon dioxide at levels considered harmless. These gases are effectively extracted through a chimney located next to the turbine and dispersed into the air.

This system is monitored and controlled remotely in real-time to ensure all aspects function properly and effectively.

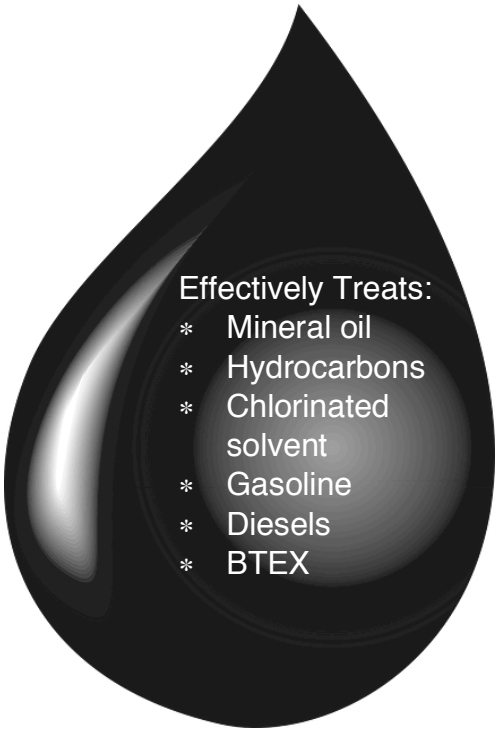

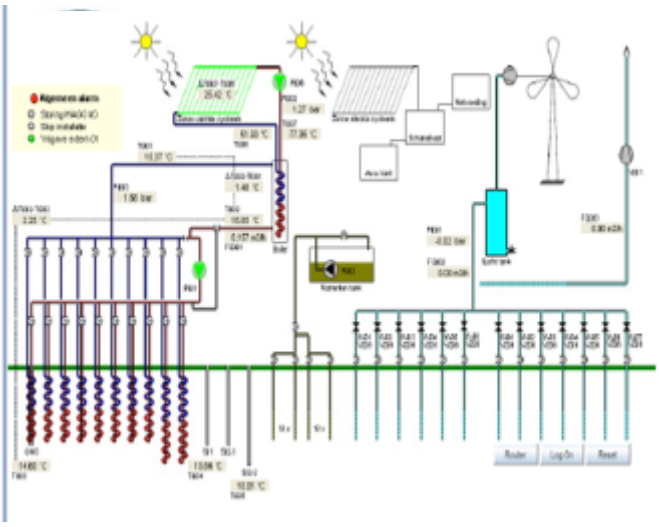

Case Study Findings

The pilot study took place in Bilthoven, Netherlands on a site that has had a long history of industrial uses dating back to 1863. Rail line, warehousing, petroleum and coal distribution center, and a paint company were some of the operations that took place onsite. The site was contaminated with mineral oil ranging from a half meter to nine meters below the surface. In 2011, approximately two meters of the vadose zone was excavated leaving the remaining 7 meters of the saturated zone to be treated with SISSR. At the beginning of this study, soil temperature was 10° C. After 20 weeks of operation the soil temperature increased to 17.6 ^{o} C and eventually reached 22° C. This increase in soil temperature accelerated the rate of contamination destruction. The goal of this system is to immobilize and to destroy contamination while preventing rebound effect with the least amount of cost. Since temperatures do not reach as high as thermal remediation technologies it requires years of treatment.

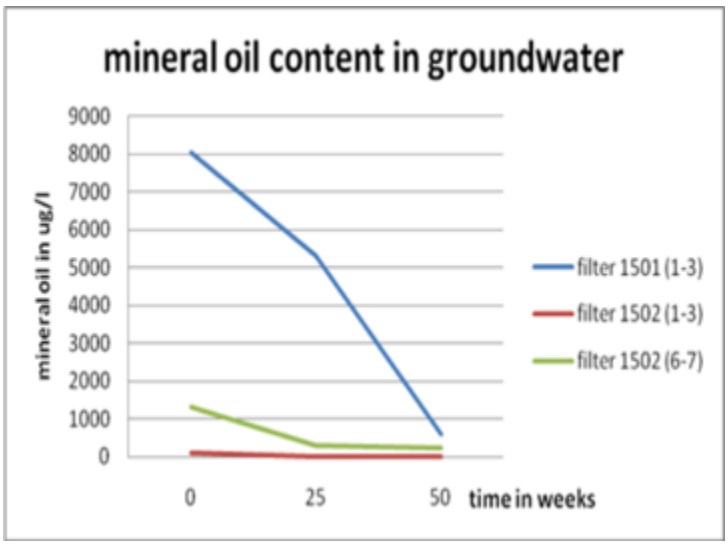

SISSR Capabilities

No two-remediation cases are the same however years of research have been dedicated to understand what are the most effective parameters for SISSR when it comes to:

- Treatable – within residual and plum zones
- Depth – saturated zone
- Soil characteristics – porous media (silty sand to gravel)
- Contamination saturation – dependent on contamination type
- Contaminants – all biodegradable contaminants

SISSR is a cost effective and safe remediation approach that relies on renewable energy sources and microorganism to destroy contaminants, making it a **GREEN AND NATURAL REMEDIATION OPTION**

For more information:

Website: www.blueforestED.com
Email: info.bfed@blueforestventures.com
Call: 1-519-688-3131 Ext: 125

Blueforest ENVIRONMENTAL DEVELOPMENT